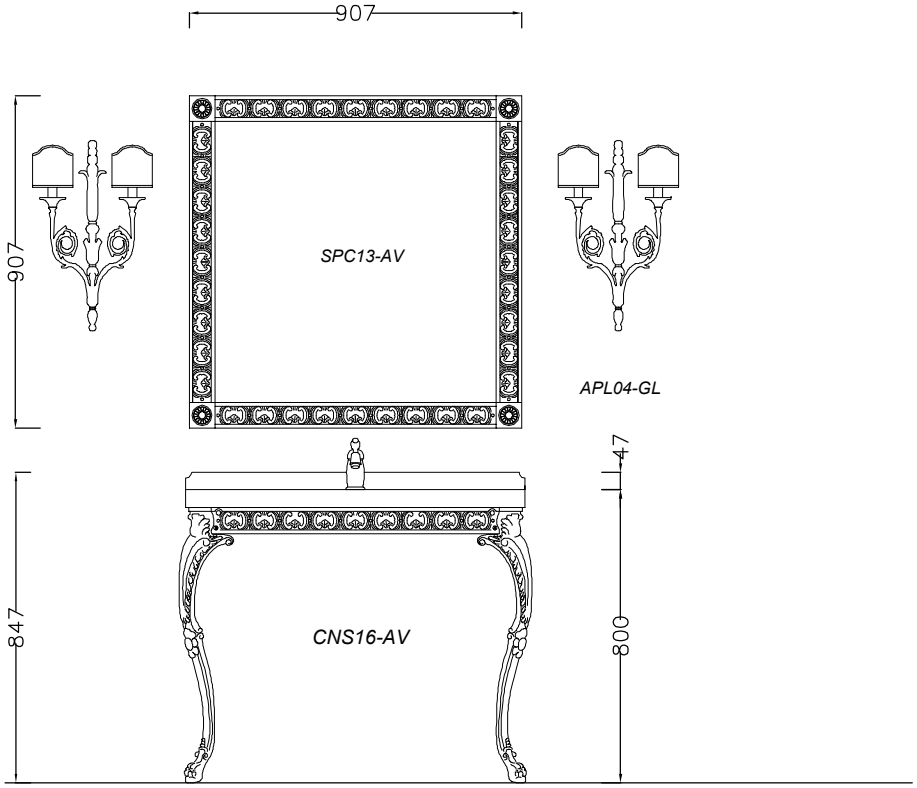

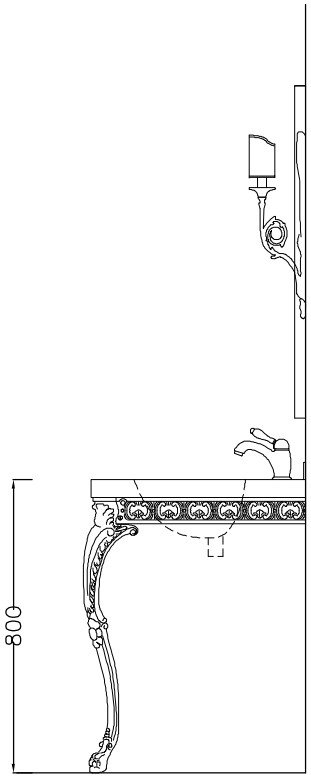

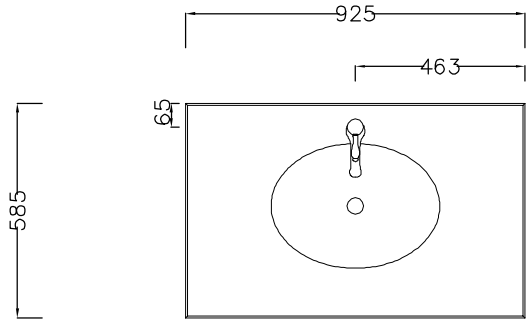

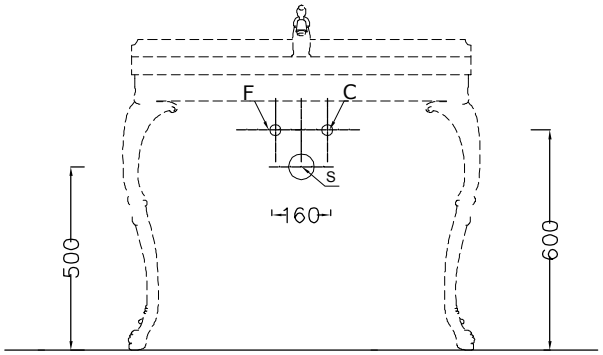

TERME
FIRENZE

Meridiana Palace

Art: CNS16-AV

Schemi tecnici
Technical drawings

Legenda/Legend

F	Attacco acqua fredda/Cold water connection
C	Attacco acqua calda/Hot water connection
S	Scarico acque chiare/Water exit

Note: